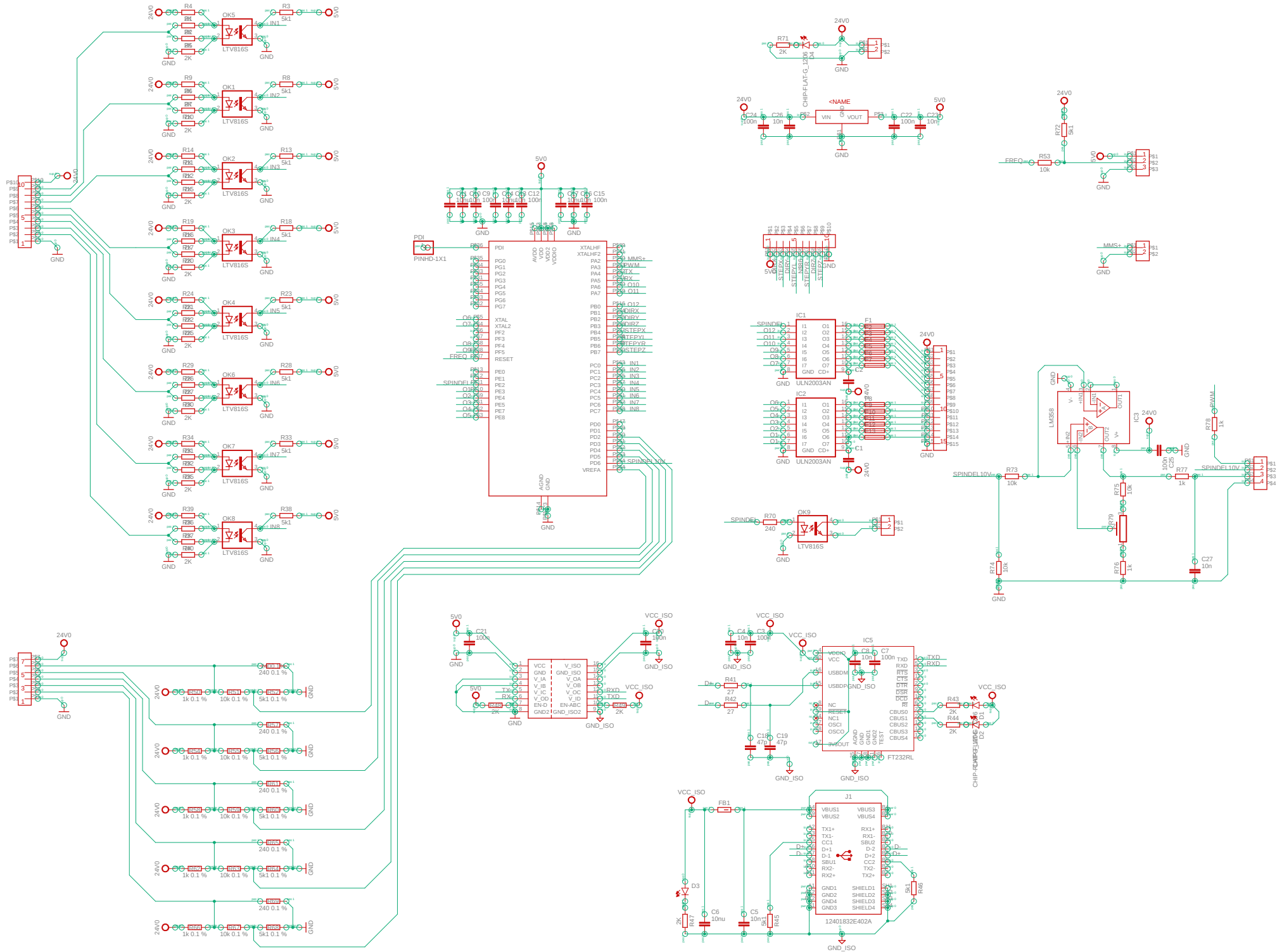

23.07.2025 19:09 f=0.54 (Sheet: 1/1)